IMPORTANT INFORMATION | KEEP FOR OPERATOR | IMPORTANT INFORMATION

OPERATOR AND SERVICE MANUAL

OM/SM-DH-CE
INTERNATIONAL

Part Number 128417 Rev. C

Models: DH-CE Mark
DHT-CE Mark

Steam Jacketed Kettle

Self-contained
Stainless Steel
Gas Heated
Floor Mounted
Tilting

DHT Model

DH Model

KEEP THIS MANUAL WITH KETTLE DOCUMENTS. OPERATORS AND TECHNICIANS SHOULD READ, UNDERSTAND AND FOLLOW WARNINGS AND INSTRUCTIONS IN THIS MANUAL (THE SERVICE MANUAL AND THE OPERATOR SECTIONS)

GROEN®

Information contained in this document is known to be current and accurate at the time of printing/creation. Unified Brands recommends referencing our product line websites, unifiedbrands.net, for the most updated product information and specifications.

MADE IN USA™

IMPORTANT — READ FIRST — IMPORTANT

IT IS MOST IMPORTANT THAT THESE INSTRUCTIONS AND THE OPERATOR AND SERVICE MANUALS BE CONSULTED BEFORE INSTALLING AND COMMISSIONING THE APPLIANCE. FAILURE TO COMPLY WITH SPECIFIED PROCEDURES MAY RESULT IN DAMAGE OR THE NEED FOR A SERVICE CALL.

THESE APPLIANCES HAVE BEEN CE MARKED ON THE BASIS OF COMPLIANCE WITH THE GAS APPLIANCE DIRECTIVE, EMC AND LOW VOLTAGE DIRECTIVE FOR THE COUNTRIES, GAS TYPES AND PRESSURES AS STATED ON THE DATA PLATE.

THESE APPLIANCES MUST BE INSTALLED BY A COMPETENT PERSON IN CONFORMITY WITH INSTALLATION AND SERVICING INSTRUCTIONS AND NATIONAL REGULATIONS IN FORCE AT THE TIME. PARTICULAR ATTENTION MUST BE PAID TO THE FOLLOWING:

I. E. E. REGULATIONS FOR ELECTRICAL INSTALLATIONS
ELECTRICITY AT WORK REGULATIONS
GAS SAFETY (INSTALLATION AND USE) REGULATIONS
HEALTH AND SAFETY AT WORK ACT
LOCAL AND NATIONAL BUILDING REGULATIONS
FIRE PRECAUTIONS ACT

DETAILED RECOMMENDATIONS ARE CONTAINED IN INSTITUTE OF GAS ENGINEERS PUBLISHED DOCUMENTS: IGE/UP/1, IGE/UP/2, BS6173 AND BE5440. FURTHERMORE, IF A NEED ARISES TO CONVERT THE APPLIANCE FOR USE WITH ANOTHER GAS, A COMPETENT PERSON MUST BE CONSULTED. THOSE PARTS WHICH HAVE BEEN PROTECTED BY THE MANUFACTURER MUST NOT BE ADJUSTED BY THE USER.

USERS SHOULD BE CONVERSANT WITH THE APPROPRIATE PROVISIONS OF THE FIRE PRECAUTIONS ACT AND THE REQUIREMENTS OF THE GAS SAFETY REGULATIONS. IN PARTICULAR THEY SHOULD BE AWARE OF THE NEED FOR REGULAR SERVICING BY A COMPETENT PERSON TO ENSURE THE CONTINUED SAFE AND EFFICIENT PERFORMANCE OF THE APPLIANCE.

WARNING: TO PREVENT SHOCKS, ALL APPLIANCES GAS OR ELECTRIC, MUST BE EARTHED.

UPON COMPLETION OF THE INSTALLATION, THE OWNERS MANUAL SHOULD BE HANDED TO THE USERS AND THE INSTALLER SHOULD INSTRUCT THE RESPONSIBLE PERSON(S) IN THE CORRECT OPERATION AND MAINTENANCE OF THE APPLIANCE.
THIS EQUIPMENT IS ONLY FOR PROFESSIONAL USE, AND SHALL BE OPERATED BY QUALIFIED PERSONS. IT IS THE RESPONSIBILITY OF THE SUPERVISOR OR EQUIVALENT TO ENSURE THAT USERS WEAR SUITABLE PROTECTIVE CLOTHING AND TO DRAW ATTENTION TO THE FACT THAT SOME PARTS BY NECESSITY WILL BECOME VERY HOT, AND WILL CAUSE BURNS IF TOUCHED ACCIDENTALLY.

WARNING: BEFORE REMOVING ANY PARTITION OR PANEL, ALWAYS TURN OFF THE ELECTRIC POWER AND ALLOW THE FAN TO STOP ROTATING. BEFORE WORKING ON ANY ELECTRICAL COMPONENT, DISCONNECT THE POWER SOURCE FROM THE UNIT.

NOTE: IT IS IMPORTANT THAT THE END-USER ROUTINELY EXAMINE THE FLUE OUTLET ON A REGULAR BASIS. DEBRIS COVERING THE FLUE OUTLET CAN CAUSE A POTENTIALLY HAZARDOUS CONDITION. REMOVE ANY FOREIGN MATERIAL BEFORE USING THIS PIECE OF EQUIPMENT.

WARNINGS AND CAUTIONS PROVIDED IN THIS OPERATOR AND SERVICE MANUAL MUST BE COMPLIED WITH.

Contents

Regulations and Safety Precautions . . . 4
1 Installation . . . 5
1.1 Model Numbers, Net Weights & Dimensions . . . 5
1.2 Siting . . . 5
1.3 Clearances . . . 5
1.4 Ventilation . . . 5
1.5 Electrical Supply . . . 5
1.6 Gas Supply . . . 6
1.7 Total Gas Rate - Natural and Propane Gas . . . 6
1.8 Injector Diameters-Natural and Propane Gas . . . 6
1.9 Gas Pressure Adjustment . . . 6
1.10 Burner Adjustment . . . 6
2 Assembly and Conditioning . . . 7
2.1 Assembly . . . 7
2.2 Gas Supply . . . 7
2.3 Electrical Supply . . . 7
2.4 Jacket Water Level/Jacket Pressure . . . 7
2.5 Pre-Commissioning Check . . . 7
2.6 Instruction to User . . . 8
3 Servicing and Conversion . . . 9
3.1 Conversion . . . 10
3.2 Jacket Vacuum . . . 10
3.3 Jacket Filling . . . 10
3.4 Water Treatment Procedure . . . 10
3.5 Removal of Control Panels . . . 11
3.6 Removal of Spark Ignition Module . . . 11
3.7 Removal of Low Water Level Control . . . 11
3.8 Removal of Tilt Switch . . . 11
3.9 Removal of Gas Control Valve . . . 11
3.10 ON/OFF Switch and Reset Button . . . 11
3.11 Removal of Neons . . . 12
3.12 Removal of Thermostat . . . 12
3.13 Removal of Pressure Switch . . . 12
3.14 Low Water Level Sensor . . . 12
3.15 Removal of the Burners . . . 13
3.16 Spark Electrode/Flame Sensing Bracket . . . 13
3.17 Removal of Pressure Gauge . . . 13
3.18 Removal of Sight Glass . . . 13
3.19 Safety Valve . . . 17
3.20 Filling Valve . . . 18
3.21 Fuse Replacement . . . 18
4 Troubleshooting . . . 19
5 User Instructions . . . 19
5.1 Equipment Description . . . 24
5.2 Lighting and Operation . . . 24
5.3 Cleaning and Maintenance . . . 26
Parts List . . . 28
Wiring Diagram . . . 31
Service Log . . . 32
Warranty . . . 33

Regulations and Safety Precautions

These Appliances have been CE marked on the basis of compliance with the Gas Appliance Directive, EMC and Low Voltage Directive for the Countries, Gas Types and Pressures as stated on the Data Plate.

These appliances MUST BE installed by a competent person in conformity with the INSTALLATION AND SERVICING INSTRUCTIONS and National Regulations in force at the time.

Particular attention MUST be paid to the following:

I.E.E. Regulations for Electrical Installations
Electricity at Work Regulations
Gas Safety (Installation & Use) Regulations
Health and Safety at Work Act
Fire Precautions Act
Local and National Building Regulations

Furthermore, if a need arises to convert the Appliance for use with another gas, a competent person must be consulted. Those parts which have been protected by the manufacturer MUST NOT be adjusted by the User.

Users should be conversant with the appropriate provisions of the Fire Precautions Act and the requirements of the Gas Safety Regulations. In particular the need for regular servicing by a competent person to ensure the continued safe and efficient performance of the Appliance.

WARNING
TO PREVENT SHOCKS, ALL APPLIANCES WHETHER GAS OR ELECTRIC, MUST BE EARTHED.

Upon completion of the installation, the Owners Manual should be handed to the users and the installer should instruct the responsible person(s) on the correct operation and maintenance of the Appliance. This equipment is ONLY FOR PROFESSIONAL USE, and shall be operated by QUALIFIED persons. It is the responsibility of the Supervisor or equivalent to ensure that users wear SUITABLE PROTECTIVE CLOTHING and to draw attention to the fact that, some parts will, by necessity, become VERY HOT and will cause burns if touched accidentally.

IMPORTANT - READ FIRST - IMPORTANT The Groen Steam Jacketed Kettle you have just purchased has been handcrafted from the finest materials, meticulously inspected, and carefully tested to ensure that you receive the best possible product. With reasonable care and periodic maintenance, it will provide years of faithful service. It is recommended that you establish a timetable for periodic maintenance as outlined in this manual. Space is provided in the Service Log at the back of this manual.

Section 1
Installation

UNLESS OTHERWISE STATED, PARTS WHICH HAVE BEEN PROTECTED BY THE MANUFACTURER ARE NOT TO BE ADJUSTED BY THE INSTALLER.

1.1 Model Numbers, Net Weights and Dimensions

MODEL•	DH-20	DH-40	DH-60
WIDTH mm (inch)	890 (34.9)	1190 (46.8)	1190 (46.8)
DEPTH mm (inch)	790 (31.0)	930 (36.5)	990 (38.9)
HEIGHT mm (inch)	1040 (40.9)	1150 (45.2)	1240 (48.7)
WEIGHT Kg	245	295	400
WEIGHT lbs	535	645	880

1.2 Siting

The appliance should be installed on a level floor in a well lit and draught free position.
The installation of the appliance must be executed in accordance with local and/or national regulations as listed in this manual.

1.3 Clearances

Minimum clearances of 150 mm (5.9 in) from the sides of the appliance and 250 mm (9.8 in) from the rear of the appliance are required if the appliance is installed next to combustible surfaces. A vertical clearance of 750 mm (29.6 in) minimum should be allowed between the top rim of kettle and any overlying surface.

1.4 Ventilation

The unit must be installed in an adequately ventilated room with a provision for adequate air supply to the unit. The area directly around the appliance must be cleared of all combustible material. For multiple installations, the requirements for individual appliances should be added together. Installation should be made in accordance with local and / or national regulations applying at the time. A competent installer must be employed.

WARNING
THE UNIT MUST BE INSTALLED BY PERSONNEL QUALIFIED TO WORK WITH ELECTRICITY AND GAS. IMPROPER INSTALLATION CAN CAUSE INJURY TO PERSONNEL AND/OR DAMAGE TO EQUIPMENT. THE UNIT MUST BE INSTALLED IN ACCORDANCE WITH ALL APPLICABLE CODES.

CAUTION
THE APPLIANCE FLUE DISCHARGES VERTICALLY FROM THE TOP OF THE UNIT AT THE REAR. IT MUST NOT BE DIRECTLY CONNECTED TO ANY FLUE, MECHANICAL EXTRACTION SYSTEM, OR DUCTING LEADING OUTSIDE THE BUILDING. THE APPLIANCE IS BEST DISCHARGED UNDER AN OPEN CANOPY WHICH CONNECTS WITH A VENTILATING SYSTEM.

Recommendations for ventilation for catering appliances are given in BS 5440:2 and are shown in the table below.

Equipment (Unit Type)	**Ventilation Rate Required**	
	m^3 /min	ft^3 /min
Range	17	600
Pastry Oven	17	600
Fryer	26	900
Grill	17	600
Steak Grill	26	900
Boiling Pan	17	600
Steamer	17	600
Sterilizing Sink	14	500
Bains Marie	11	400
Tea/Coffee Machine	8.5-14	300-500

1.5 Electrical Supply

This unit is designed for connection to fixed wiring. A suitably rated isolating switch with contact separation of at least 3 mm (0.12 in) on

both poles must be fitted to the installation and the wiring executed in accordance with the regulations listed in this manual.

Cable entry is at the lower rear on the right side of the appliance. Access is gained by removing relevant panels as described in Paragraphs 3.5.1 and 3.5.2.

Provide 230 VAC, 50 Hz, 1 Phase, 1 AMP or 40 Watts service. The electrical schematic is in the service compartment and this manual.

WARNING
THIS APPLIANCE MUST BE EARTHED.

1.6 Gas Supply

Incoming service must be of sufficient size to supply full rate without excessive pressure drop. A gas meter is connected to the service pipe by the Gas Supplier. Any existing meter should be checked by the Gas Supplier to ensure that it has capacity to pass the required rate of gas for the kettle in addition to other installed gas equipment.

The appliance governor is incorporated in the gas control valve which is in the control cabinet. The control valve governor is suitable for both natural and propane gases without conversion.

Installation pipe work should be fitted in accordance with IEGE/UP/2. The pipe work should not be smaller than the gas inlet connection on the kettle, i.e. Rp ½ (½" B.S.P.)

An isolating cock must be located near the appliance to allow shut down during emergency or servicing. Test for gas soundness and purged as specified in IGE/UP/1.

Water Supply-Not applicable.

1.7 Total Gas Rate - Natural (G20 and G25) and Propane (G31) Gas

Model	Kw	BTU/hr
DH-20	18.6	63,500
DH-40	24.5	83,600
DH-60	39.6	135,200

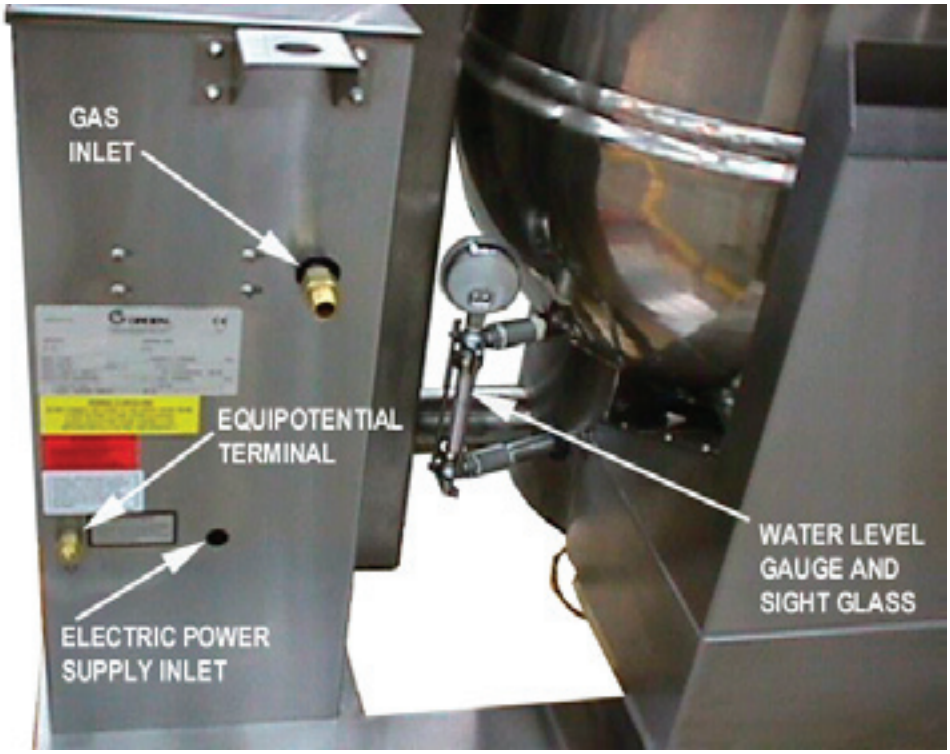

Gas and Electrical Connections are made at the rear of the unit.

1.8 Injector Diameters-Natural and Propane Gas (See Note, Paragraph 1.10 at right)

Model	DH-20	DH/1-40	DH-60
Number of Injectors	15	20	25
Natural Gas G20	1.10 mm	1.25 mm	1.30 mm
Natural Gas G25	1.20 mm	1.25 mm	1.40 mm
Propane Gas G31	0.65 mm	0.75 mm	0.75 mm

1.9 Gas Pressure Adjustment

A pressure test point is fitted on the burner manifold and on the gas control valve.

		DH-20	DH/1-40	DH-60
Natural Gas-G20	mBar	8.75	5.8	8.25
	WCI*	3.5	2.3	3.3
Natural Gas-G25	mBar	8.0	7.0	8.25
	WCI*	3.2	2.8	3.3
Propane Gas-G31	mBar	29	21	25
	WCI*	11.6	8.4	10.0

**WCI = Water Column Inches*

NOTE: With reference to gas rate, pressure adjustments and conversions, this appliance is CE-approved for use with the following gases:

a) G20 natural gas may be supplied to the appliance in Austria, Belgium, Denmark, Finland, France, Germany, Greece, Iceland, Ireland, Italy, Luxembourg, Norway, Portugal, Spain, Sweden, Switzerland and the United Kingdom.

b) G25 natural gas may be supplied to the appliance in Belgium, France and the Netherlands.

c) G31 propane gas may be supplied to the appliance in France, Germany, Ireland, the Netherlands, Portugal, Spain, Switzerland, and the United Kingdom.

Use of the appliance with non-approved gases in a listed country, or use in other countries, will void CE certification.

1.10 Burner Adjustment

The burners are fixed aeration type and have no provision for adjustment of air inlet.

Section 2
Assembly and Commissioning

2.1 Assembly

d) Unpack the appliance

b) Place on a firm, level floor. Adjust and fix the feet.

CAUTION
SHIPPING STRAPS ARE UNDER TENSION AND CAN SNAP BACK WHEN CUT. TAKE CARE TO AVOID PERSONAL INJURY OR DAMAGE FROM STAPLES LEFT IN THE WALLS OF THE CARTON.

2.2 Gas Supply

Connect the unit to the gas supply and test for gas soundness. For gas supply down stream of the gas valve, leak detection spray or soap solution may be used with the burners lit.

CAUTION
ENSURE THAT THE KETTLE CONTAINS LIQUID WHEN THE BURNERS ARE ALIGHT.

2.3 Electrical Supply

Before commissioning the appliance, ensure that the electrical installation has been carried out to the relevant regulations (Paragraph 1.5).

WARNING
THIS APPLIANCE MUST BE EARTHED.

2.4 Jacket Water Level/Jacket Pressure

a) Ensure the water level in the jacket is correct, by confirming that it is between the sight glass marks. If it is low, follow instructions in Paragraph 3.3.

b) Check the pressure gauge. If it does not show 20 or more inches of vacuum (that is, a reading of 20 to 30 below zero) see "Jacket Vacuum" (Paragraph 3.2).

Before operation, check the water level and jacket pressure.

2.5 Pre-Commissioning Check

a) Prior to operation, clean out kettle pan thoroughly using hot water and detergent. Rinse pan thoroughly.

b) Remove all literature and packing materials from the interior and exterior of the unit.

c) Ensure the open end or the elbow at the outlet of the safety valve is directed down. If not, turn the elbow to the correct position. See detailed Instructions on Page 11 for Safety Valve installation and operation.

2.5.1 Lighting Sequence

From Initial Start Up:

a) Put a small amount of water in kettle pan.

b) Ensure gas and electricity mains are “on.”

c) Switch the toggle switch to the "on" position.

d) Turn thermostat dial to desired setting.

e) Verify that spark igniter lights the burners.

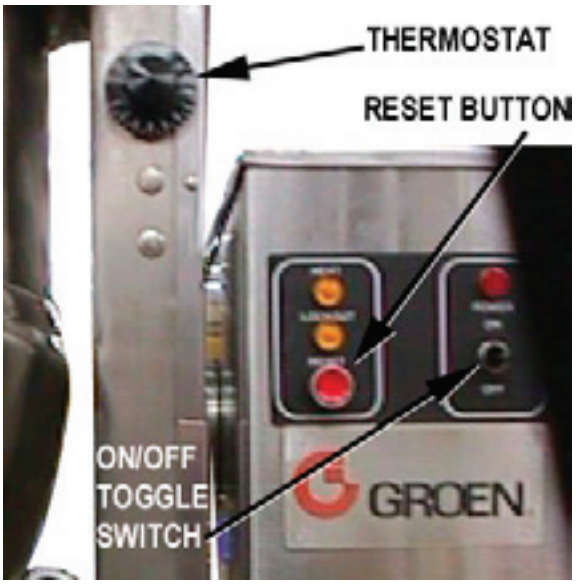

f) If the unit does not light, it will lock-out. Turn it off and wait one or two minutes before attempting to switch the unit on again.

g) Press reset lock-out switch and repeat steps (b) to (e).

h) To switch unit off, switch toggle (On/Off) switch to the "Off" position.

i) Turn gas and electricity mains off.

2.5.2 Setting The Gas Pressure

a) It is necessary to check the gas pressure during commissioning. A pressure gauge must be connected to the pressure test point on the gas control valve or the gas manifold. See figure above for test points.

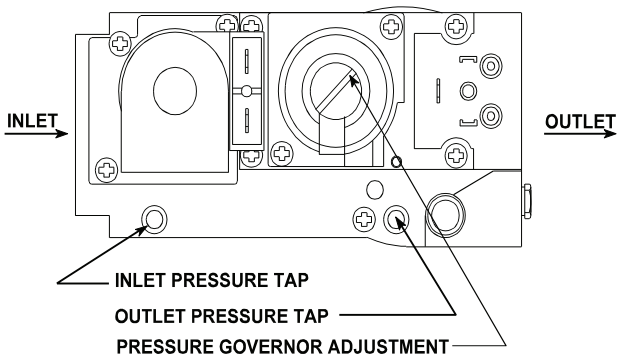

b) When checking pressure at test points on the gas valve, undo the screw a half turn and slip tube over nipple.

c) Turn the main gas and electricity supply on.

d) Light the burners (Paragraph 2.5.1).

e) Remove control cabinet side panel screws.

f) Remove governor cap screw from control valve. See figure for position on valve.

g) Governor is suitable for both natural and propane gas.

h) To increase pressure turn the screw inside the governor turret clockwise; anti-clockwise to reduce pressure. Check the burner pressure again after 15 minutes operation and adjust if necessary.

i) Disconnect the pressure gauge from the test point. Re-seal the pressure test point and test for gas soundness.

j) Replace governor cap screw and replace lid and panels.

2.5.3 Checking Performance of Controls

a) Light the unit. Check that controls quickly and smoothly produce a healthy spark from the electrode to the earthing post.

b) Turn thermostat off and then on. Check that burners go out and reignite smoothly and quickly when switched back on. Repeat several times.

c) If the unit fails to respond as described, it should be serviced by an authorized Groen service agent.

2.6 Instruction to Installer

Important: After installing and commissioning the appliance, the user's instructions should be handed to the user or purchaser. Ensure that the instructions for lighting, turning off, correct use and cleaning are properly understood. The location of the main gas isolating valve should be emphasized and the emergency shut down procedure should be demonstrated.

Section 3
Servicing and Conversion

IMPORTANT

BEFORE ATTEMPTING ANY SERVICING, ENSURE THAT THE ISOLATING COCK IS TURNED OFF AND CANNOT BE INADVERTENTLY TURNED ON AND THAT THE ELECTRICITY SUPPLY IS DISCONNECTED.

AFTER ANY MAINTENANCE TASK, CHECK THE APPLIANCE TO ENSURE THAT IT PERFORMS CORRECTLY AND CARRY OUT ANY NECESSARY ADJUSTMENTS AS DETAILED IN SECTION 1.

ALWAYS CHECK FOR GAS SOUNDNESS AFTER CARRYING OUT ANY SERVICING OR EXCHANGE OF GAS CARRYING COMPONENTS.

NOTE: *When replacing wiring connections refer to the wiring diagram contained on the unit and within this manual.*

After Servicing

a) Test for gas soundness as specified in IGE/UP1 as appropriate after any gas connection has been disturbed.

b) Check for correct operation, as appropriate (see commissioning of appliance).

Regular Servicing Procedures

The following must be serviced at regular intervals.

Burners

The burner should be cleaned periodically to maintain maximum performance. Burners are best cleaned with a wire brush and any blocked parts are best cleaned with a metal broach, taking care not to damage the burner head.

The injector orifice should be cleaned with a wooden splinter. Metal reamers may distort or increase the orifice size and should be avoided.

Gears

The gear housing has fitting for proper lubrication of moving parts. The gears do not run in oil, periodic lubrication with grease is necessary. Frequency of lubrication will depend on operating conditions, but it should be performed at least once every 6 months. It is recommended that a #2 grade LGI lithium grease be used. Add grease through the Zerk fittings on the gear housing until grease flows out of bearings around the trunnion shaft. Place a liberal amount of grease on the gear to cover the arc that is in contact with the worm gear.

Safety Valve

At least twice a month the safety valve requires checking to make sure it works correctly. When the gauge pressure is about five PSI, lift the valve lever enough to vent steam, then quickly let it snap back into place.

WARNING
AVOID ANY EXPOSURE TO THE STEAM BLOWING OUT OF THE SAFETY VALVE.

This procedure should be explained to the user, since it is to be carried out at least twice a month. Safety procedures and requirements should also be explained to the user when carrying out the procedure.

Safety Valve Operating Instructions

If adding water to a boiler, **DO NOT ALLOW** water to flow through safety valve as sediment or debris may be deposited on seating surface.

To achieve topmost performance and maximum service life, it is necessary to maintain a proper pressure margin between set pressure of the safety valve and equipment operating pressure.

The minimum required pressure margin for this type of valve is 10% of the safety relief valve set pressure, but not less than five PSI. **UNDER NO CIRCUMSTANCES SHOULD THIS MARGIN BE LESS THAN 5 PSI.** Failure to maintain this operating margin may result in water leakage past the seat and accumulation of deposits on the seating surface. Excessive deposits may prevent the valve from operating properly, and a dangerous pressure build-up and equipment rupture may result.

Maintenance and Testing

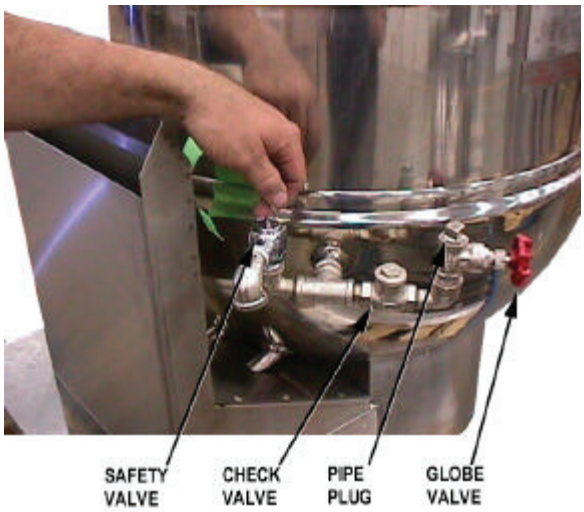

Test the operation of the safety valve on a regular basis.

CAUTION
BEFORE TESTING, MAKE CERTAIN DISCHARGE PIPE IS PROPERLY CONNECTED TO VALVE OUTLET AND ARRANGED TO CONTAIN AND SAFELY DISPOSE OF BOILER DISCHARGE (SEE "INSTALLATION INSTRUCTIONS").

Under normal operating conditions a "try lever test" must be performed every two months. Under severe service conditions, or if corrosion and/or deposits are noticed within the valve body, testing must be performed more often. A "try lever test" must also be performed at the end of any non-service period.

Test at or near maximum operating pressure by holding the test lever fully open for at least 5 seconds to flush the valve seat free of sediment and debris. Then release lever and permit the valve to snap shut.

If lift lever does not activate, or there is no evidence of discharge, discontinue use of equipment immediately and contact a licensed contractor or qualified service personnel.

Neither Conbraco Industries, Inc. nor its agents assume any liability for valves improperly installed or maintained.

This quality Conbraco safety relief valve, along with proper installation, use, and maintenance, will provide many years of reliable service and protection against excessive pressure build-up of water/steam. Use of this valve for any other purpose or media places all responsibility upon the user. Before installing valve or operating equipment to which it is installed, read instructions carefully. Always wear proper safety equipment.

INSTALLATION OF SAFETY VALVE

a) Installation must be performed by qualified service personnel only.

b) The BTU/hr or lb/hr rating of this valve must equal or exceed that of the equipment to which it is attached.

c) **DO NOT** use this valve on a coal or wood boiler having an uncontrolled heat input.

d) Ensure that all connections, including the valve inlet, are clean and free from any foreign material.

e) Use pipe compound sparingly, or tape, on external threads only.

f) **DO NOT USE A PIPE WRENCH!** Use proper type and size wrench on wrench pads only.

g) This valve must be mounted in a vertical, upright position directly to a clean, tapped opening in the top of the boiler or equipment. Under no circumstances should there be a flow restriction or valve of any type between the safety relief valve and the pressure vessel

h) **WARNING!** During operation, this valve may discharge large amounts of steam and/or hot water. To reduce the potential for bodily injury and property damage, a discharge line **MUST** be installed that:

1. is connected from the valve outlet with no intervening valve and directed downward to a safe point of discharge.

2. allows complete drainage of both the valve and the discharge line

3. is independently supported and securely anchored so as to avoid applied stress on the valve.

4. is as short and straight as possible.

5. terminates freely to atmosphere where any discharge will be clearly visible and is at no risk of freezing.

6. terminates with a plain end that is not threaded.

7. is constructed of a material suitable for exposure to temperatures of 375º F or greater.

8. is, over its entire length, of a size equal to or greater than the valve outlet.

Use only schedule 40 pipe for discharge. (Do not use schedule 80, extra strong pipe or connections). **DO NOT CAP, PLUG, OR OTHERWISE OBSTRUCT DISCHARGE PIPE OUTLET!**

9) See appropriate ASME Boiler and Pressure Vessel Code for additional installation instructions.

3.1 Conversion

See Paragraphs 1.8 and 1.9 for important information for gas conversion. Verify the type of gas to be used.

To change the type of gas used (e.g. G20 to G25 or G31) change the following:

Burner injector
Pressure setting
Data plate

The governor spring does not need to be changed; only the pressure setting.

ALL CONVERSIONS MUST BE FOR APPROVED GAS IN THE COUNTRIES LISTED IN PARAGRAPH 1.9.

IMPORTANT

THIS APPLIANCE WAS FITTED AT THE FACTORY WITH GAS INJECTORS FOR TYPE G20 NATURAL GAS. INJECTORS FOR TYPE G25 NATURAL GAS ARE SHIPPED AS AN ACCESSORY. PRIOR TO INSTALLING EQUIPMENT, OR WHEN CONVERTING TO ANOTHER GAS, VERIFY THAT THE INJECTOR SIZE MARKING ON THE GAS INJECTOR MATCHES THE INFORMATION ON THE DATA PLATE FOR THE TYPE OF GAS BEING USED.

3.2 Jacket Vacuum

When the kettle is cold, a positive reading or a reading around zero on the pressure vacuum gauge indicates an excess of air in the jacket. Air in the jacket slows down kettle heating.

To remove air:

a) Light the unit. (Paragraph 2.5.1)

b) When the pressure/vacuum gauge reaches a positive pressure reading of 5 PSI, release air and steam by lifting the lever on the safety valve for about one second. Repeat this a few times. Then let the lever snap back to the closed position.

See detailed Instructions on Page 11 pertaining to Safety Valve installation and operation.

3.3 Jacket Filling (TURN OFF GAS AND ELECTRICITY MAINS)

The jacket has been charged at the factory with the proper amount of treated, distilled water. You may need to restore jacket water to its proper level, either because it was lost as steam during venting or by draining.

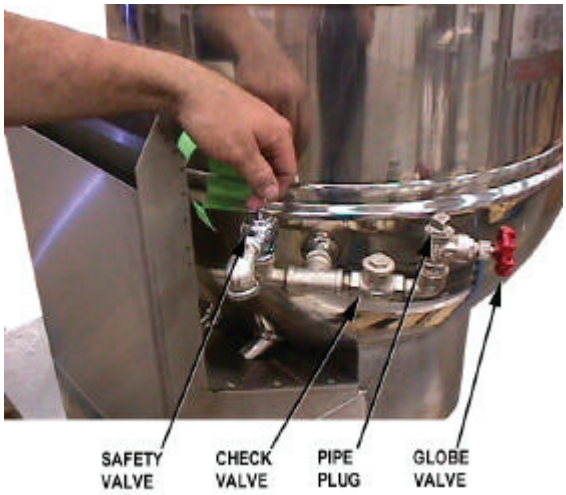

The procedure for adding water follows:

a) If you are replacing water lost as steam, use distilled water. If you are replacing treated water that ran out of the jacket, prepare more treated water as directed below.

b) Allow the kettle to cool completely. Using the proper size spanner, remove the pipe plug from above the globe valve.

c) Open the globe valve and pour distilled or treated water into the pipe plug orifice. Hold the safety valve open while you pour to let air escape from the jacket.

d) Air introduced to the jacket during the filling operation must be removed to obtain efficient heating. See Paragraph 3.2.

See detailed Instructions on Page 11 pertaining to Safety Valve installation and operation.

3.4 Water Treatment Procedure

WARNING
READ AND FOLLOW WATER TREATMENT COMPOUND LABEL PRECAUTIONS TO AVOID INJURY.

a) Fill the mixing container with the measured amount of water required. (See Table). **Use distilled water only.**

Model	Kettle Capacity	Jacket Capacity
DH-20	75.7 Litres	6.6 Litres
DH-40	151.4 Litres	7.1 Litres
DH-60	227.1 Litres	11.3 Litres

b) Hang a strip of pH test paper on the rim of the container, with about 1" of the strip below the surface of the water.

c) Measure the water treatment compound you will be using. (One way to do this is to add the compound to the water from a small measuring cup).

d) Stir the water continuously, while you slowly add water treatment compound, until the water reaches a pH between 10.5 and 11.5. Judge the pH by frequently comparing the color of the test strip with the color chart provided in the pH test kit.

e) Record the exact amounts of water and treatment compound used. These amounts may be used again, if the same sources of water and compound are employed. However, it is advisable to check the pH every time water is prepared. For optimum performance, use correctly treated, distilled water.

3.5 Control Panels

3.5.1 Control Cabinet Lid

a) Remove the four screws around the edge of the lid securing it to the control cabinet.

b) Remove the lid.

c) Replace in reverse order.

3.5.2 Control Cabinet Side Panel

a) Remove lid (Para 3.5.1).

b) Remove the four screws securing the side panel to the control cabinet.

c) Remove panel.

d) Replace in reverse order.

3.5.3 Supporting Column Access Panels

a) Remove the four screws securing the two panels to the supporting column.

b) Remove both panels.

c) Replace in reverse order.

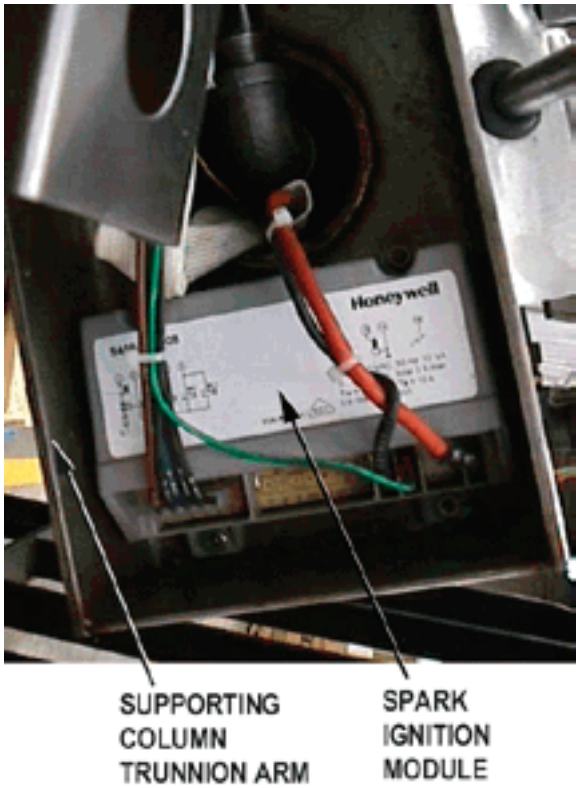

3.6 Removal of Spark Ignition Module (Turn the gas and electricity mains off)

a) Remove supporting column (trunnion arm) access panels (Paragraph 3.5.3).

b) Disconnect electrical leads from spark ignition module.

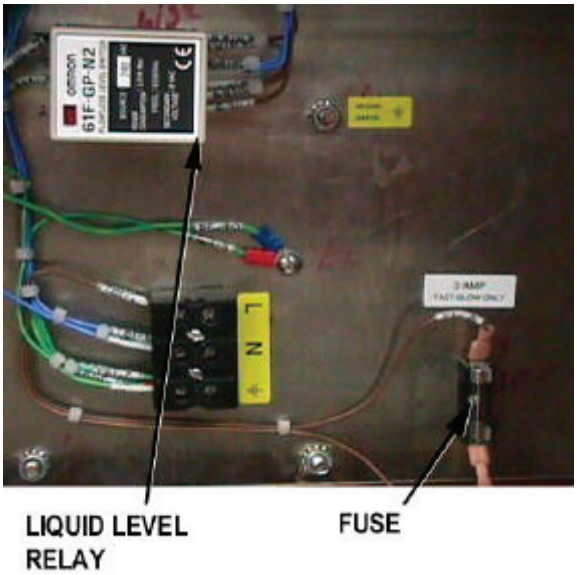

c) Remove retaining screws securing module.

d) Withdraw spark ignition module from control cabinet.

e) Replace in reverse order.

3.7 Removal of Low Water Level Control Relay (Turn the gas and electricity mains off)

a) Remove control cabinet lid (Para 3.5.1).

b) Remove control cabinet side panel as in Para 3.5.2.

c) Remove low water level control from its base by undoing the two retaining clips.

d) Replace in reverse order.

Ensure the low water level control relay is correctly oriented when re-positioned.

3.8 Removal of Tilt Switch (Turn the gas and electricity mains off)

a) Remove control cabinet lid (Para 3.5.1).

b) Remove control cabinet side panel (Para 3.5.2).

c) Disconnect electrical leads from tilt switch.

d) Remove screws securing the tilt switch.

e) Withdraw tilt switch from control cabinet.

f) Replace in reverse order.

g) Verify that the tilt switch shuts off the burner gas supply when the kettle is tilted. Adjustment range is 5º to 10º.

3.9 Removal of Gas Control Valve (Turn the gas and electricity mains off)

a) Remove control cabinet lid (Para 3.5.1).

b) Remove control cabinet side panel (Para 3.5.2).

c) Disconnect electrical leads from control valve.

d) Undo union fittings on outlet side of the control valve.

e) Remove control valve from control cabinet.

f) Replace in reverse order.

3.10 Removal of ON/OFF Switch and Reset Button (Turn the gas and electricity mains off)

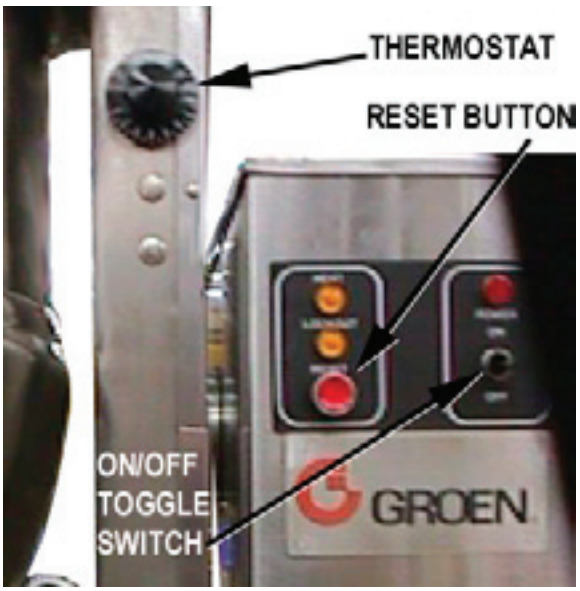

a) Remove control cabinet lid. (Para 3.5.1).

b) Remove control cabinet side panel (Para 3.5.2).

c) Disconnect electrical leads from the On/Off switch or reset button.

d) Undo and remove retaining collar which secures the On/Off switch to the outer surface, and the reset button to the inner surface of the control cabinet.

e) Withdraw the On/Off switch or the reset button as required.

f) Replace in reverse order.

3.11 Removal of Neons (Turn the gas and electricity mains off)

a) Remove control cabinet lid (Para 3.5.1)

b) Remove control cabinet side panel (Para 3.5.2)

c) Disconnect the electrical leads to the neon.

d) Undo and remove the retaining collar which secures the neon to the control cabinet.

e) Withdraw the neon from the control cabinet.

f) Replace in reverse order.

3.12 Removal of Thermostat (Turn the gas and electricity mains off)

a) Remove supporting column access panels (Para 3.5.3).

b) Remove panel from kettle base by undoing the retaining screws.

c) Drain kettle by tilting kettle slightly and undoing phial boss connection. Allow kettle to drain into a suitably sized container.

WARNING
ENSURE THAT THE OTHER ELECTRICAL LEADS AND CONNECTIONS SITUATED IN THE KETTLE BASE DO NOT GET WET. REMOVE THEM IF NECESSARY.

Important: Drained water from kettle jacket should be retained. Jacket was charged at the factory with the correct amount of treated water. This water should be used to refill the kettle. However, if water is lost during drainage see Paragraph 3.3, Jacket Filling.

d) Remove thermostat control knob and disconnect electrical leads.

e) Undo and remove thermostat retaining screws securing the thermostat to the supporting column.

f) Feed thermostat phial through supporting column and withdraw the thermostat.

g) Replace in reverse order.

h) Ensure an adequate sealant is used to seal the replacement thermostat phial boss.

i) Once the thermostat is in place, the jacket should be refilled. (Para 3.3)

Always refer to wiring diagram when re-connecting leads. (See Page 30)

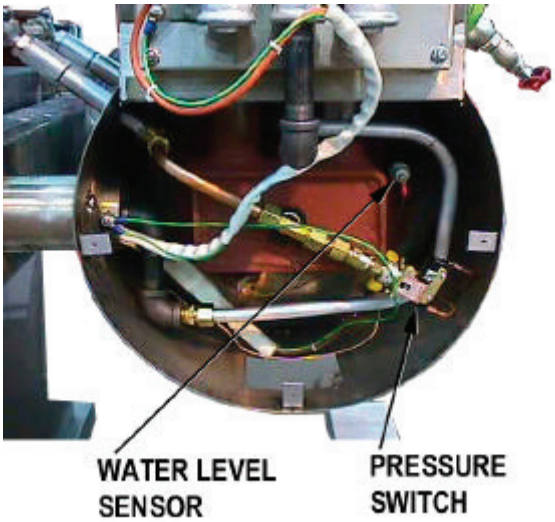

3.13 Removal of Pressure Switch (Turn the gas and electricity mains off)

a) Remove panel from base of kettle by undoing the retaining screws.

b) Disconnect the electrical leads from the pressure switch.

c) Drain kettle by tilting kettle slightly and undoing the compression fitting at the pressure switch. Allow kettle to drain into a suitably sized container.

d) Remove and withdraw the pressure switch from the kettle base by undoing the compression fitting.

e) Replace in reverse order.

f) Once the pressure switch is in place, the kettle jacket should be refilled. (Para 3.3)

Always refer to wiring diagram when reconnecting electrical leads. (See Page 30)

3.14 Removal of Low Water Level Sensor (Turn gas and electricity mains off)

a) Remove panel from base of kettle by undoing the retaining screws.

b) Disconnect the electrical leads from the water sensor.

c) Drain the kettle by tilting it slightly and undoing the low water level sensor. Allow the kettle to drain into a suitably sized container.

d) Remove the low water sensor from the kettle base.

e) Replace in reverse order.

f) Ensure a suitable sealant is used to seal the low water level sensor Boss.

g) When the low water level sensor is in place, the jacket should be filled. (Para 3.3)

3.15 Removal of Burners (Turn the gas and electricity mains off)

a) Undo compression fitting at gas pipe to burner manifold.

b) Disconnect electrical leads to the igniter and flame sensor.

c) Remove the four retaining nuts securing the burner and igniter assembly to the combustion chamber. Carefully support the weight of the burner manifold and lower the assembly to a safe position.

d) The burners are now accessible and can be removed as required. Ensure adequate sealant is used to seal the burners.

e) Replace in reverse order.

Always check for gas soundness when any part of the gas circuit has been disturbed.

3.16 Removal Of Spark Electrode/Flame Sensing Bracket (Turn the gas and electricity mains off)

a) Perform the procedure in Para 3.5.3a.

b) Perform the procedure in Para 3.5.3b.

c) Disconnect the HT spark connection from igniter.

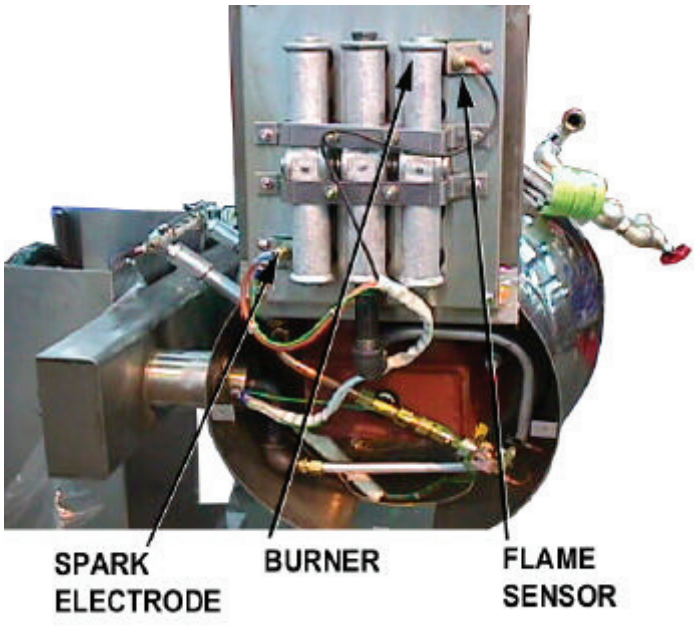

DH-20 shown

d) Perform the procedure in Paragraph 3.13(a).

e) Remove the spark electrode or flame sensing electrode by unscrewing it.

f) Replace in reverse order.

g) Ensure that there is an adequate spark at the sparking electrode and that the burners light smoothly and without delay.

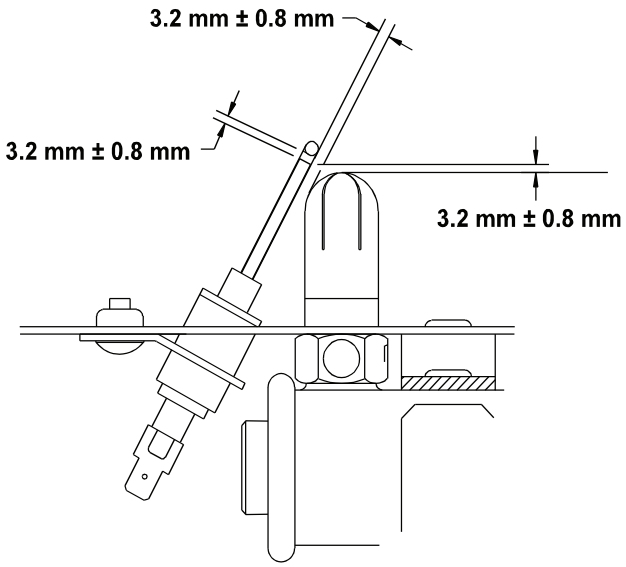

Recommended spacings are shown in this drawing.

h) As the burners ignite, ensure that the sparking sequence stops and that the burners remain lit.

i) If the burners do not light, or ignite but do not remain lit, further adjustment to the sparking or sensing electrode is required.

3.17 Removal of Pressure Gauge (Turn the gas and electricity mains off)

a) Using the correctly sized spanner remove the pressure gauge from top of the sight glass.

b) Replace with new pressure gauge ensuring that an adequate sealing compound is used.

c) Once the pressure gauge has been replaced, the kettle jacket will require

venting. (Para 3.2)

3.18 Removal of Sight Glass (Turn the gas and electricity mains off)

a) Remove sight glass protection bars.

b) Undo top and bottom compression fittings.

c) Allow the water in the sight glass to drain.

d) Remove the sight glass.

e) Replace in reverse order.

f) Once the sight glass has been replaced, the lost jacket water requires replacement. (Para 3.3)

3.19 Removal of Safety Valve (Turn the gas and electricity mains off)

a) Remove the elbow from the safety valve.

b) Remove the safety valve from kettle jacket pipework.

c) Replace in reverse order.

d) Ensure an adequate sealing compound is used to seal the safety valve.

e) Once the safety valve has been replaced the jacket will need to be vented. (Para 3.2)

See detailed Instructions on Page 11 pertaining to Safety Valve installation and operation.

3.20 Removal of Filling Valve (Turn the gas and electricity mains off)

a) Remove filling valve from kettle jacket pipe-work.

b) Replace in reverse order.

c) Ensure adequate sealing compound is used to seal the valve.

d) Once the fill valve has been replaced the jacket will need to be vented. (Para 3.2)

3.21 Fuse Replacement (Turn the gas and electricity mains off)

a) Remove control cabinet lid (Para 3.5.1)

b) Remove control cabinet side panel (Para 3.5.2)

c) Remove fuse from vertical fuse holder.

d) Replace fuse (identical to fuse removed)

e) Replace in reverse order.

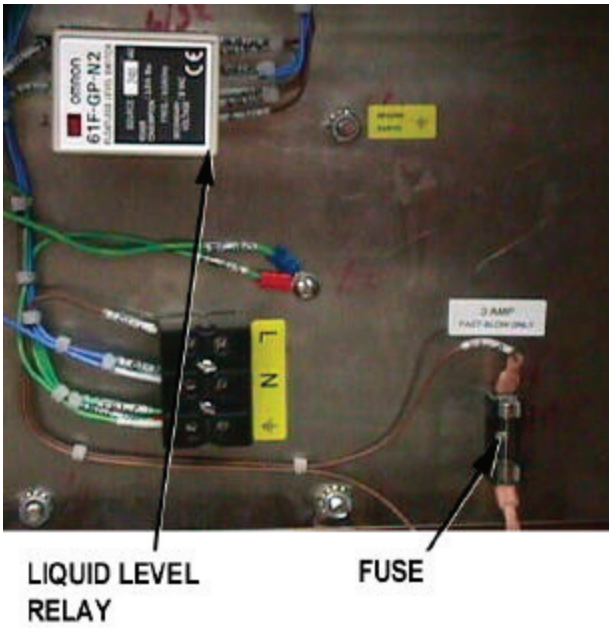

4. Troubleshooting

Your Groen kettle is designed to operate smoothly and efficiently if properly maintained. However, the following are checks to make in the event of a problem. Wiring diagrams are inside the service panel.

USE OF ANY REPLACEMENT PARTS OTHER THAN THOSE SUPPLIED BY GROEN OR THEIR AUTHORIZED DISTRIBUTORS CAN CAUSE INJURY TO THE OPERATOR AND DAMAGE TO THE EQUIPMENT AND WILL VOID ALL WARRANTIES.

SYMPTOM	WHO	WHAT TO CHECK
Kettle is hard to tilt.	User	a. Gears for foreign materials, lubrication and alignment.
Burners will not light.	User	a. Is main gas valve open (handle in line with gas pipe)? b. Gas supply to your building. c. That kettle body is not tilted. d. Is electric power turned on at the circuit breaker or fuse box, and is power being supplied to the appliance e. Thermostat operation.
Kettle continues heating after it reaches the desired temperature.	User	a. Thermostat dial setting.
	Auth Service Rep Only	b. Thermostat calibration. c. Thermostat operation. Thermostat should click when the dial is rotated above and below a setting.
Kettle stops heating before it reaches the desired temperature.	User	a. Thermostat dial setting.
	Auth Service Rep Only	b. Thermostat calibration. c. Thermostat. Thermostat should click when the dial is rotated above and below a setting.
Kettle heats slowly	User	a. Air in jacket - pressure/vacuum gauge (20 to 30 below zero when the kettle is cold?)
Safety valve pops.	User	a. Air in jacket - pressure/vacuum gauge (20 to 30 below zero when the kettle is cold?) b. Whether kettle was being heated while empty.
	Auth Service Rep Only	c. If high pressure limit switch is set too high. d. Thermostat. Thermostat should click when the dial is rotated above and below a setting. e. Safety valve. If valve pops below 300 PSI, replace.
System does not produce a spark	Auth Service Rep Only	a. Thermostat. Close the contacts if they are open b. AC voltage between terminals “1" and “GR.” If it is not 230 Volt, check the high limit switch, which should be closed. c. That the high tension cable is firmly attached and in good condition. If cracked or brittle, replace the pilot. e. Electrode ceramic for crack or break. f. Electronic spark ignition module. Replace if needed.
Spark is present but the pilot will not light.	Auth Service Rep Only	a. That the gas valve is opening. b. That pressure meets the control manufacturer’s specifications. c. For gas at the pilot. If it is not flowing: (1) Check pilot gas line for kinks or obstructions. (2) Clean orifice, if necessary. (3) Replace the pilot valve.
Pilot lights, but main burner will not come on and spark does not stay on.	Auth Service Rep Only	a. That the gas pressure meets the control manufacturer’s specifications. b. Replace electric module.

SYMPTOM	WHO	WHAT TO CHECK
Pilot lights, but main burner will not come on, the spark stays on.	Auth Service Rep Only	a. Sensor cable, to make certain that there are secure attachments to terminal “13" and the sensor. b. Sensor ceramic for cracks. c. That cable is not grounded out. If it is, correct the ground. d. Sensor cable for continuity and condition of insulation. e. (1) Check the gas pressure. (2) Clean the pilot Assembly. (3) Tighten mechanical and electrical connections.
Pilot lights, but main burner will not come on, and spark does not stay on.	Auth Service Rep Only	a. Than gas pressure complies with nameplate ratings. b. Electronic spark ignition module. Replace if necessary. c. That both gas solenoids are staying open.
Main burner comes on but will not stay lit.	Auth Service Rep Only	a. Check burner ground for bad wire or connection. Replace with high temperature wire if necessary. b. Check for low gas supply pressure. If necessary, replace ignition control module. c. Ceramic insulator or pilot flame sensor cracked. Replace flame sensor.

5. User Instructions

Regulations and Safety Precautions

These Appliances have been CE marked on the basis of compliance with the Gas Appliance Directive, EMC and Low Voltage Directive for the Countries, Gas Types and Pressures as stated on the Data Plate.

These appliances MUST BE installed by a competent person in conformity with the INSTALLATION AND SERVICING INSTRUCTIONS and National Regulations in force at the time.

Particular attention MUST be paid to the following:

I.E.E. Regulations for Electrical Installations
Electricity at Work Regulations
Gas Safety (Installation & Use) Regulations
Health and Safety at Work Act
Fire Precautions Act
Local and National Building Regulations

Furthermore, if a need arises to convert the Appliance for use with another gas, a competent person must be consulted. Those parts which have been protected by the manufacturer MUST NOT be adjusted by the User.

Users should be conversant with the appropriate provisions of the Fire Precautions Act and the requirements of the Gas Safety Regulations. In particular the need for regular servicing by a competent person to ensure the continued safe and efficient performance of the Appliance.

WARNING
TO PREVENT SHOCKS, ALL APPLIANCES WHETHER GAS OR ELECTRIC, MUST BE EARTHED.

Upon completion of the installation, the Owners Manual should be handed to the users and the installer should instruct the responsible person(s) on the correct operation and maintenance of the Appliance. This equipment is ONLY FOR PROFESSIONAL USE, and shall be operated by QUALIFIED persons. It is the responsibility of the Supervisor or equivalent to ensure that users wear SUITABLE PROTECTIVE CLOTHING and to draw attention to the fact that, some parts will, by necessity, become VERY HOT and will cause burns if touched accidentally.

IMPORTANT - READ FIRST - IMPORTANT The Groen Steam Jacketed Kettle you have just purchased has been handcrafted from the finest materials, meticulously inspected, and carefully tested to ensure that you receive the best possible product. With reasonable care and periodic maintenance, it will provide years of faithful service. It is recommended that you establish a timetable for periodic maintenance as outlined in this manual. Space is provided in the Service Log at the back of this manual.

5.1 Equipment Description

5.1.1 General

Groen models DH are stainless steel, steam jacketed, floor mounted, tilting kettles with a self-contained, gas-heated steam source. The kettle body is welded into one piece and furnished with a reinforced bar rim and welded "butterfly" pouring lip. The interior of the kettle is polished to a 180 emery grit finish, and the exterior is given a bright semi-deluxe finish. The unit is ASME shop inspected and registered with the National Board for working pressures up to 50 PSI. Kettle support, tilting mechanism, and controls are contained in an enclosed base resting on tubular legs with adjustable ball feet. Tilting is provided by a self-locking, worm-and-gear device.

The self-contained steam source is heated by propane or natural gas and ignition is by electronic spark.

Charged at the factory with treated, distilled water, the steam source provides kettle temperature of 65• C to 150• C. Controls for the unit include a thermostat, pressure gauge, gauge glass, safety valve, pressure limit control, low water cut-off, on/off switch, and a multi-functional gas control valve.

The gas supply shuts off automatically when the kettle is tilted.

Service connections are required for gas and 230-V, single phase, 50-Hz electricity.

IMPORTANT

Prior to operation, clean out the kettle pan thoroughly using hot water and detergent. Rinse out and dry thoroughly.

The gas burners are protected by an electronic flame failure device which incorporates automatic ignition of the burners and instant shut-off of the gas supply to the burners should a gas supply interruption occur.

5.1.2 Available Options

Options available with listed models are :

a. No. 31 lift-off cover.
b. No. 51 one piece, counterbalanced cover with actuator. (Factory installed option).
c. Basket insert.
d. Water filler with swing spout and bracket
e. Kettle brush kit.

5.1.3 Operational and Maintenance Safety

WARNING

INSTALLATION OF THE UNIT MUST BE DONE BY PERSONNEL QUALIFIED TO WORK WITH ELECTRICITY AND PLUMBING IN ACCORDANCE WITH ALL APPLICABLE CODES.

BEFORE REPLACING ANY PARTS, DISCONNECT THE UNIT FROM THE ELECTRIC POWER SUPPLY AND CLOSE THE MAIN GAS COCK. ALLOW FIVE MINUTES FOR UNBURNED GAS TO VENT.

TO PREVENT SHOCKS, ALL APPLIANCES WHETHER GAS OR ELECTRIC, MUST BE EARTHED.

CAUTION

BE SURE ALL OPERATORS READ, UNDERSTAND, AND FOLLOW THE OPERATING INSTRUCTIONS, CAUTIONS AND SAFETY INSTRUCTIONS CONTAINED IN THIS MANUAL.

5.2 Lighting and Operation

5.2.1 Initial Kettle Lighting and Operational Readiness Check

After the DH Kettle has been installed according to service and installation instructions, perform initial start-up as a test, to ensure that the unit is operating correctly. Refer to the pictures on this page for identification of DH kettle controls and indicators.

a) Remove all literature and packing material from the interior and exterior of the unit.

b) Make sure gas and electricity supplies are switched on.

c) Ensure that the kettle is filled with water before lighting.

d) Check the water level in the jacket. The level should be between the lines on the gauge glass. If the level is low the jacket water level will be required to be topped up. (This will require a service call).

e) Check the pressure gauge. If the gauge does not show sufficient vacuum (20 to 30 below zero) then the jacket will require venting. (This will require a service call).

f) Switch the On/Off switch to the "On" position. The "power on" neon will illuminate.

g) Turn the thermostat dial to the required setting.

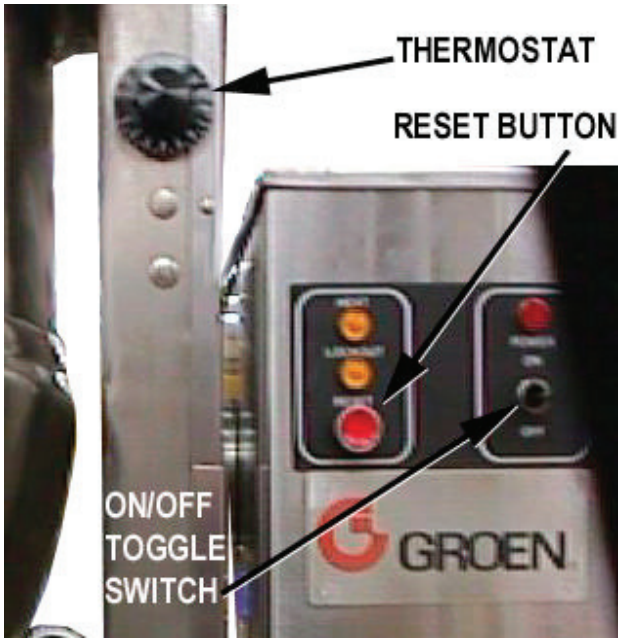

h) After 10-15 seconds the burners should light. The "heat" neon will illuminate.

i) In the event the burners do not light, or go out as indicated by the illumination of the lockout indicating neon, turn the unit off. Wait approximately one minute. Press the lockout reset and repeat steps (d) to (h).

WARNING
AVOID CONTACT WITH THE FLUE. SURFACES ARE VERY HOT AND WILL CAUSE BURNS.

DO NOT OBSTRUCT FLUE OPENING.

5.2.2 To Shut Down Kettle

a. Turn the thermostat dial to the "Off" position.

b. Switch the On/Off switch to the "Off" position.

c. For a prolonged shut down, turn the gas and electricity mains off.

Follow steps a and b.

5.2.3 Filling the Kettle

Prior to operation, thoroughly clean the kettle using hot water and detergent.

Kettle capacities:

Model	Maximum Capacity
DH-20	75 Litres
DH-40	150 Litres
DH-60	225 Litres

To prevent surge boiling, no more than 80% of the maximum capacity should be used.

5.2.4 Users Thermostat

Provides automatic control of the Kettle Jacket temperature at settings up to 147• C maximum.

5.2.5 Sequence of Operation

The following "sequence of operation" outline is provided to help the user understand how the unit functions.

When the operator sets a temperature on the thermostat dial, the thermostat switch closes and sends a signal which (1) starts the spark and (2) opens the automatic valve for the burners.

The spark ignites the burner on low flow. The flame completes a circuit at the sensing probe and sends a signal that causes the spark to shut off and the automatic valve to open to full flow once a flame has been detected. If a flame is not detected within 15 seconds the gas is automatically cut-off and the appliance is locked-out. The unit can only be re-lit once the reset button has been pressed.

In addition to the lockout timer, safety features include:

a. Low-water cut-off relay that will shut off the gas supply to all burners until the water level is corrected.

b. High pressure switch, set to open at about 46 PSI and shut down the burners until jacket pressure is decreased.

c. Pop safety valve, which will release steam if the jacket pressure exceeds 50 PSI.

See detailed Instructions on Page 11 pertaining to Safety Valve installation and operation.

d. Tilt cut-off switch that shuts off all burners when the kettle is tilted.

When the kettle reaches the set temperature, the thermostat switch opens, stopping the signal to the gas control valve and causing the valve to shut off all gas flow. When the kettle cools below the set temperature, the thermostat switch closes and starts another heating cycle. On-off cycling continues and maintains the kettle at the desired temperature.

5.2.6 To Empty Kettle

5.2.6.1 DH and DHT Kettles

To tilt the body of the kettle forward, turn the hand crank on the front of the cabinet anti-clockwise. The body will stay in the position it holds when you stop turning the handle. To return the body to the upright position, turn the crank clockwise.

5.2.6.2 DHT Kettle Only

Turn the handle on the tangent draw-off valve anti-clockwise. After approximately 3-1/2 turns the valve handle can be pulled forward so that full flow is achieved. To close the tangent draw-off valve, push the handle inward until the threads on the valve stem engage. Turn the handle clockwise until the valve is closed. Do not over-tighten since over-tightening may damage the valve seat.

WARNING
DO NOT STAND IN FRONT OF THE KETTLE BODY WHEN TILTING IT. BE CAREFUL TO KEEP HOT CONTENTS FROM SPILLING. ENSURE PEOPLE ARE KEPT AWAY FROM THE KETTLE WHEN EMPTYING THE KETTLE.

5.2.7 Power Failure

If the power to the unit fails do not attempt to operate the appliance until the electricity supply is re-established.

When the power comes back on follow the steps in Paragraph 5.2.1 Initial Kettle Lighting and Operational Readiness Check.

5.3 Cleaning and Maintenance

CAUTION
DISCONNECT THE ELECTRICITY SUPPLY BEFORE ANY CLEANING IS UNDERTAKEN. THE APPLIANCE MUST NOT BE CLEANED WITH A JET OF WATER OR STEAM CLEANED.

5.3.1 Suggested Tools

a) Detergent and sanitizing agent, or a combination cleaning - sanitizing agent.

b) Long handled and short handled kettle brushes.

5.3.2 Precautions

Before cleaning, shut off the burner by turning the thermostat dial to "OFF". If water or cleaning/sanitizing solution will be sprayed, shut off all electric power to the unit at a remote switch such as the circuit breaker.

WARNING
KEEP WATER AND SOLUTIONS OUT OF CONTROLS, GEARS AND BURNERS. NEVER SPRAY OR HOSE THE CONTROL CONSOLE, ELECTRICAL CONNECTIONS, TILTING MECHANISM OR CABINET.

5.3.3 Procedure

a) Clean all food contact surfaces as soon as possible after use, preferably while the kettle is still hot. If the unit is in continuous use, thoroughly clean and sanitise both interior and exterior at least once every 12 hours

b) Scrape and flush out large amounts of food residues. Be careful not to scratch the kettle with metal implements.

c) Prepare a hot solution of the detergent or cleaning compound as instructed by the supplier. Clean the unit thoroughly. A cloth moistened with cleaning solution can be used to clean controls, control housings electrical conduit, etc.

d) Rinse kettle and draw-off parts thoroughly with hot water, then drain completely. Keep draw-off parts together. They are not interchangeable.

e) When you reassemble the draw-off valve hand tighten only.

f) As part of the daily cleaning program, clean all external and internal surfaces that may have been soiled. Remember to check such parts as the underside of the kettle and the control housing.

g) To remove materials stuck to the equipment, use a brush, sponge, cloth, plastic or rubber scraper, or plastic wool along with the detergent solution. To minimize the effort required in washing, let the detergent solution sit in the kettle and soak into the residue, or heat the detergent solution briefly. Do not use any abrasive materials or metal implement that might scratch the surface. Scratches make the surface hard to clean and provide places for bacteria to grow. DO NOT use steel wool, which may leave particles imbedded in the surface and cause eventual corrosion and pitting

h) The exterior of the unit may be polished with a recognized stainless steel cleaner or with hot water and detergent.

i) When the equipment needs to be sanitized, use a sanitizing solution equivalent to one that supplies 200 parts per million available chlorine. Obtain advice on the best sanitizing agent from your supplier of sanitizing products. Following the suppliers instructions, apply the sanitizing agent after the unit has been cleaned and drained. Rinse off the sanitizing agent thoroughly.

CAUTION
LEAVING A CHLORINE SANITIZING AGENT IN CONTACT WITH STAINLESS STEEL FOR MORE THAN 30 MINUTES CAN CAUSE CORROSION.

j) It is recommended that the unit be sanitized before use.

k) If there is difficulty removing mineral deposits or a film left by hard water or food residues, clean the kettle thoroughly and then use a deliming agent, such as GroenDelimer Descaler (P/N 114800) or LimeAway from Eco Lab Inc., in accordance with the manufacturer's

directions. Rinse and drain the unit before further use.

l) If especially difficult cleaning problems persist, contact your cleaning product supplier for assistance.

5.3.4 Safety Precautions

A stopcock will be fitted in the gas pipe supplying the appliance. The user must be familiar with its location and operation to turn it off in an emergency. If there is a smell of gas, turn off the gas, ventilate the area and call the gas supplier. Do not search for gas leaks with naked flames.

5.3.5 Service-Periodic Maintenance

A Maintenance and Service Log is attached. Each time maintenance is performed on your Groen equipment, enter the date on which the work was done, what was done and who did it. File the log with the warranty. Periodic inspection can minimize equipment down time and increase the efficiency of operation. The following points should be checked regularly:

a. The pressure/vacuum gauge should show a vacuum of 20 to 30 inches when the kettle is cold. If it does not, the unit requires servicing.

b. The jacket water level should be between the gauge glass marks. If it is not, the unit requires servicing.

c. Keep electrical wiring in good condition.

Parts List

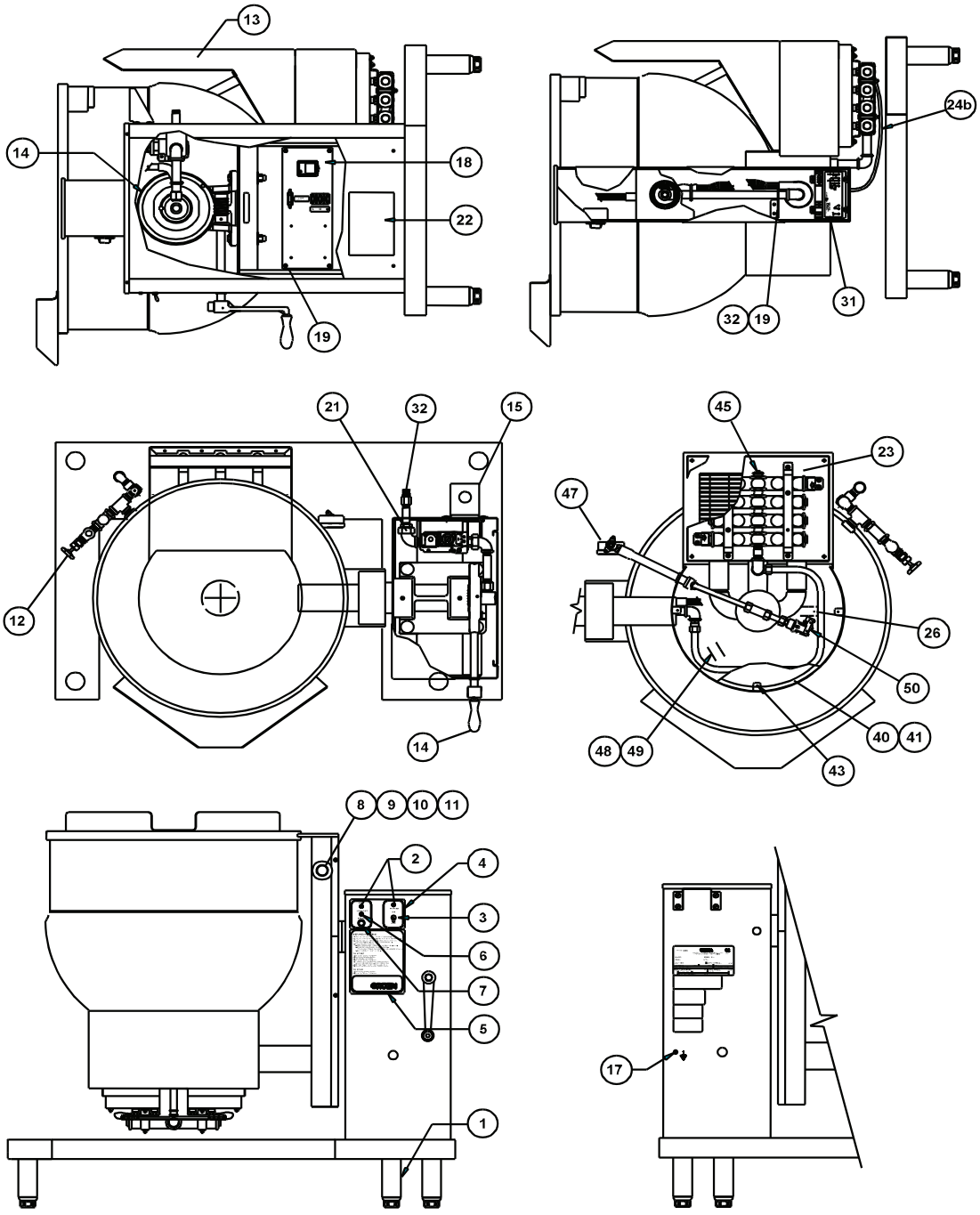
13
14
18
22
19
24b
32
19
31
21
32
15
12
14
45
23
47
26
50
40
41
48
49
43
8
9
10
11
2
4
3
6
7
5
1
17

Parts List

Key	Description	Part No.	Key	Description	Part No.
1	Foot, Adjustable Bullet	013275	22	Label, Wiring Diagram	113077
2	Light, Indicator, Amber 220 VAC	116382	23*	Burner & Flame Sensor Assembly	
3	Switch, Toggle DPST	122004	23a*	Burner & Flame Sensor Assy DH-20	117016
4	Label, Indicator Lights	113076	23a1*	Burner Assy w/Manifold (DH-20 G20)	090623
5	Label, Operating Instructions	113075	23a2*	Burner Injector (DH-20 Nat Gas G-20)	107122
6	Light, Indicator, Red 220 VAC	116381	23a3*	Burner Injector (DH-20 Nat Gas G-25)	127557
7	Switch, Push Button (Momentary)	122003	23a4*	Burner Injector (DH-20 PropGas G-31)	127564
8	Knob, Thermostat	122000	23b*	Burner & Flame Sensor Assy DH-40	117015
9	Thermostat	009730	23b1*	Burner Assy w/Manifold DH-40 G20	090625
10	Screw, Rnd Head Mach #8-32 x d lg	009697	23b2*	Burner Injector (DH-40 Nat Gas G-20)	102943
11	Thermostat Adapter	107172	23b3*	Burner Injector (DH-40 Nat Gas G-25)	102943
12	Water Fill and Safety Valve Assly	097008	23b4*	Burner Injector (DH-40 PropGas G-31)	127555
12a	Valve, Safety	097005	23c*	Burner & Flame Sensor DH-60	117014
12b	Valve, Check	004187	23c1*	Burner Assy w/Manifold DH-60 G20	090644
12c	Valve, Gate	004180	23c2*	Burner Injector (DH-60 Nat Gas G-20)	068964
13	Flue Stack Assembly DH-20	117039	23c3*	Burner Injector (DH-60 Nat Gas G-25)	102945
13	Flue Stack Assembly DH-40	117034	23c4*	Burner Injector (DH-60 PropGas G-31)	127555
13	Flue Stack Assembly DH-60	117030	23d*	Igniter/Sensor Bracket Assembly	117003
14	Tilt Gear Mechanism Assembly	045752	23e*	Spark/Sensing Probe	003328
14a	Key, 3/8" Sq x 1-3/8" lg	001474	24	Wire Harness	
14b	Screw, hex hd ½ 13 x 1-1/2	008679	24a	Wire Harness, Main	122045
14c	Nut, hex 1/2"-13	005705	24b	Wire Harness, Igniter & Sensor	122044
14d	Washer, lock, 1/2"	005735	25	Gas Inlet Adapter ½ BSPT x ½ NPT	116392
14e	Housing, Bearing Assy	009762	26	Water Level Probe	015589
14f	Bearing Ball	009765	31	Pilot Ignition Control	113060
14g	Gear, Worm	012026	32	Bracket, Gas Supply Piping	117025
14h	Pin, Roll, 1/4" dia x 1" Lg	012614	40	Gasket, “U” Groove	007937
14i	Ring, Retaining, Internal 1 - 3/4"	013483	41	Bottom Cover (DH-20)	049799
14j	Gear, 92 T, 3" Bore	013609	41	Bottom Cover (DH-40, 60)	090630
14k	Handle, Crank ¾ “ Bore	013617	43	Screw, truss head #10-32 x 1/2" lg	072189
14l	Shaft, Handle, 3/4" x 13-1/2"	013624	45	Gas Test Nipple	117051
14m	Spacer, 3"	013625	46	Nut Hex #8-32	002632
15	Faucet Bracket	009054	47	Water Level Switch Assy	097075
17	Equipotential Assembly	122021	48	Water Level Electrode	074665
18	Electrical Panel Assembly	122024	49	Boot Electrode	010390
18a	Relay, Water Level Sensor	117737	50	Pressure Switch	108559
18b	Base, Water Level Sensor Relay	117738	-	Water Treatment Kit	110324
18c	Terminal Block	003888	-	TDO Replacement Parts	
18d	Panel, Electrical	122037	-	Valve Stem	009048
18e	Holder, Fuse 3 AG	077854	-	Bonnet	009047
18f	Fuse, 3 AMP, Fast Blow	079965	-	O-Ring	009034
19	Hex Keps Nut ¼-20	012940	-	Hex Nut	009354
21	Gas Piping Assy DH-20 (See Pg 30)	122048	-	Handle	009029
21	Gas Piping Assy DH-40 (See Pg 30)	122025	-	Wing Nut	009028
21	Gas Piping Assy DH-60 (See Pg 30)	122074			

***NOTE: See Paragraph 1.10 (Page 7) for permissible conversions.**

Parts List, Continued
Gas Valve and Piping Assembly

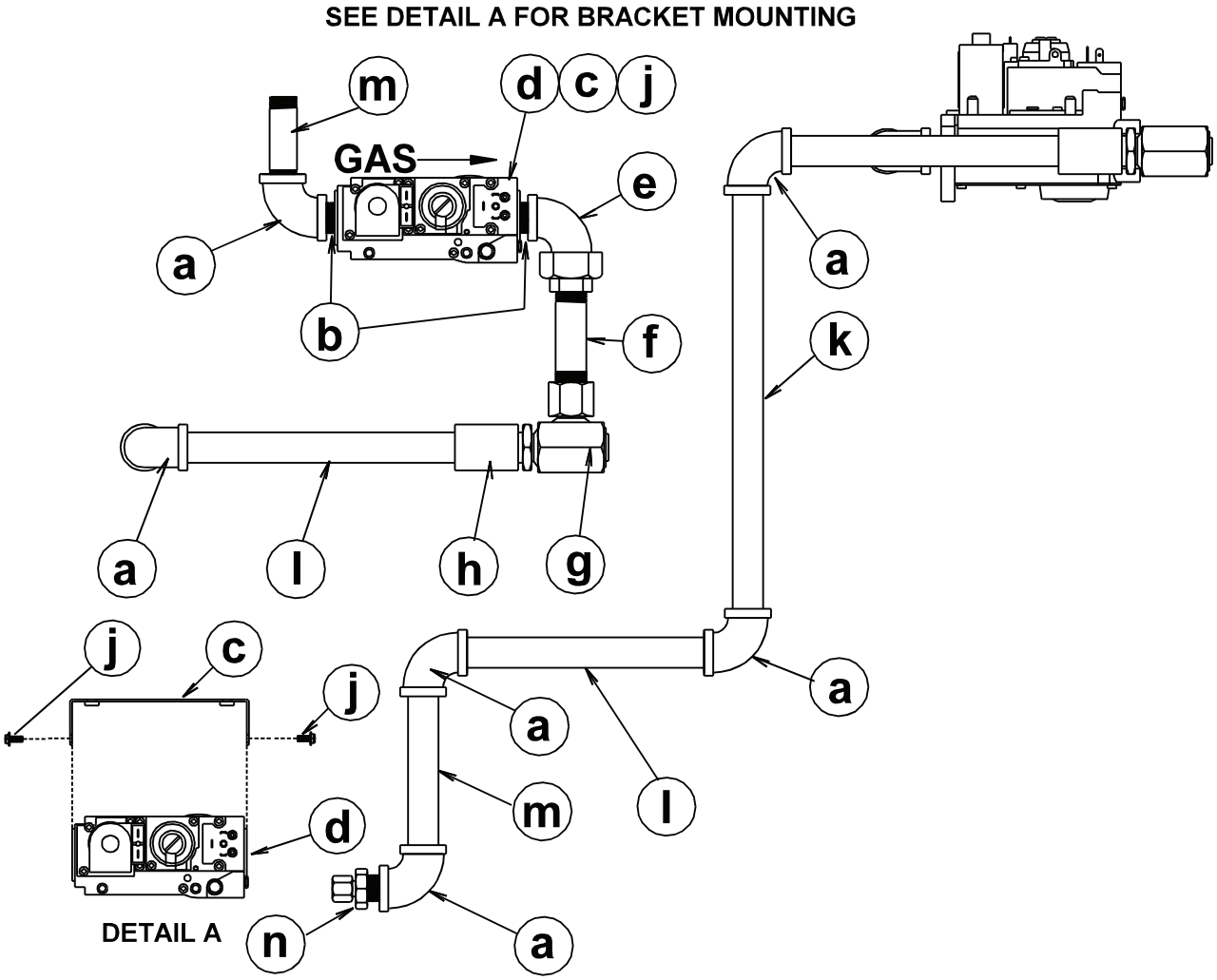

Key	Description	Part No.	Key	Description	Part No.
21	**Gas Piping Assy**		i	Nipple, 1/2" NPT x 8-1/2 BI	003943
a	Elbow, 90 deg. 1/2" NPT BI	008747	j	Screw, M5x10mm Lg, Phillips Pan hd	116388
b	Nipple, Close, 1/2" NPT x 1/2" BSPT	116394	k1	Nipple, 1/2" NPT x 11" BI	005673
c	Bracket, Mounting, Gas Valve	122014	k2	Nipple, 1/2" NPT x 13" BI	005674
d	Valve, Gas (G20/G25 Gas)	114505	l1	Nipple, 1/2" NPT x 5-1/2" BI	010234
e	Elbow 90 Deg Union, 1/2" NPT BI	005495	l2	Nipple, 1/2" NPT x 7" BI	005556
f	Nipple 1/2" NPT x 4-1/2 BI	008569	l3	Nipple, 1/2" NPT x 9" BI	027224
g	Swivel Joint	001155	m	Nipple, 1/2" NPT x 2-1/2" BI	005552
h	Coupling, Full 1/2" NPT BI	005722	n	Fitting, 1/2" NPT x 5/8" tube	049093

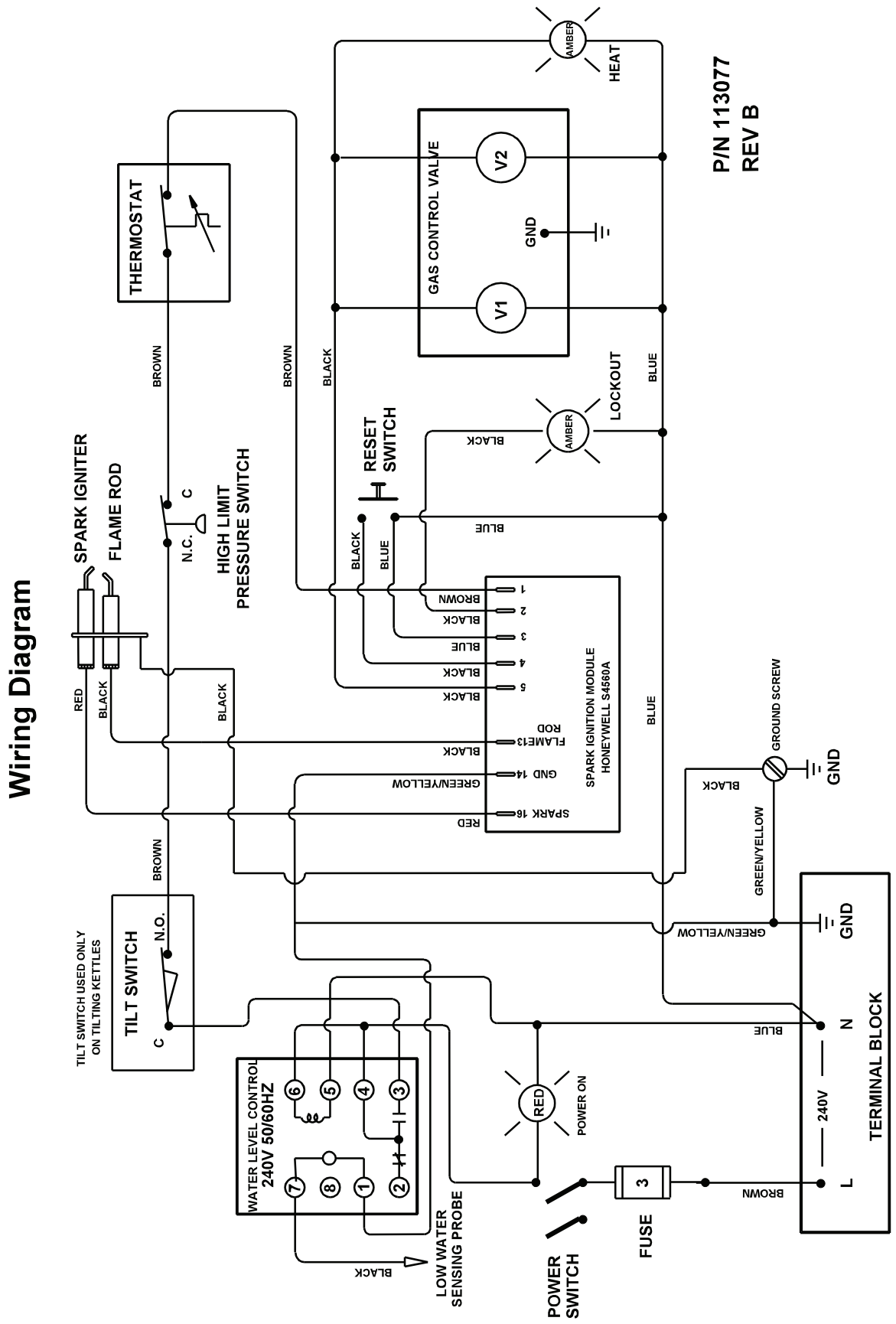
Wiring Diagram
P/N 113077
REV B
THERMOSTAT
GAS CONTROL VALVE
V1
V2
GND
HEAT
AMBER
LOCKOUT
AMBER
RESET
SWITCH
SPARK IGNITER
FLAME ROD
HIGH LIMIT
PRESSURE SWITCH
N.C.
C
SPARK IGNITION MODULE
HONEYWELL S4560A
FLAME13
ROD
GND 14
SPARK 16
GROUND SCREW
GND
TILT SWITCH
N.O.
C
TILT SWITCH USED ONLY
ON TILTING KETTLES
WATER LEVEL CONTROL
240V 50/60HZ
LOW WATER
SENSING PROBE
RED
POWER ON
POWER
SWITCH
FUSE
3
240V
L
N
GND
TERMINAL BLOCK
BROWN
BLACK
BLUE
RED
GREEN/YELLOW

Service Log

Model **m** _____ Purchased From _____

Serial **m** _____ Location _____

Date Purchased _____ Date Installed _____

Purchase Order **m** _____ For Service Call _____

Date	Service Performed	Performed By

Service Log

Model **m** _____ Purchased From _____

Serial **m** _____ Location _____

Date Purchased _____ Date Installed _____

Purchase Order **m** _____ For Service Call _____

Date	Service Performed	Performed By

Service Log

Model **m** _____ Purchased From _____

Serial **m** _____ Location _____

Date Purchased _____ Date Installed _____

Purchase Order **m** _____ For Service Call _____

Date	Service Performed	Performed By

Service Log

Model **m** _____ Purchased From _____

Serial **m** _____ Location _____

Date Purchased _____ Date Installed _____

Purchase Order **m** _____ For Service Call _____

Date	Service Performed	Performed By

*Limited Warranty To Commercial Purchasers**

(for Areas Outside of the U.S. and Canada)

Groen Foodservice Equipment ("Groen Equipment") has been skillfully manufactured, carefully inspected and packaged to meet rigid standards of excellence. Groen warrants its Equipment to be free from defects in material and workmanship for (12) twelve months from date of installation or (18) eighteen months from date of shipment with the following conditions and subject to the following limitations.

I. This parts warranty is limited to Groen Equipment sold to the original commercial purchaser/users (but not original equipment manufacturers), at its original place of installation, in areas outside the U.S. and Canada.

II. Damage during shipment is to be reported to the carrier, is not covered under this warranty, and is the sole responsibility of the purchaser/user.

III. Groen, or an authorized service representative, will repair or replace parts, at Groen's sole election, for any Groen Equipment, including but not limited to, drawoff valves, safety valves, gas and electric components, found to be defective during the warranty period.

IV. This warranty does not cover boiler maintenance, calibration, or periodic adjustments as specified in operating instructions or manuals, and consumable parts such as scraper blades, gaskets, packing, etc., or labor costs incurred for removal of adjacent equipment or objects to gain access to Groen Equipment. This warranty does not cover defects caused by improper installation, abuse, careless operation, or improper maintenance of equipment. This warranty does not cover damage caused by poor water quality or improper boiler maintenance.

V. THIS WARRANTY IS EXCLUSIVE AND IS IN LIEU OF ALL OTHER WARRANTIES, EXPRESSED OR IMPLIED, INCLUDING ANY IMPLIED WARRANTY OF MERCHANTABILITY OR FITNESS FOR A PARTICULAR PURPOSE, EACH OF WHICH IS HEREBY EXPRESSLY DISCLAIMED. THE REMEDIES DESCRIBED ABOVE ARE EXCLUSIVE AND IN NO EVENT SHALL GROEN BE LIABLE FOR SPECIAL, CONSEQUENTIAL OR INCIDENTAL DAMAGES FOR THE BREACH OR DELAY IN PERFORMANCE OF THIS WARRANTY.

VI. Groen Equipment is for commercial use only. If sold as a component of another (O.E.M.) manufacturer's equipment or if used as a consumer product, such Equipment is sold AS IS and without any warranty.

* (Covers All Food Service Equipment Ordered After October 1,1995)

UNIFIED BRANDS
FOODSERVICE EQUIPMENT SOLUTIONS
A DOVER COMPANY

GROEN GLOBAL WEB SITE
Us Out
www.groen.com

GROEN®

1055 Mendell Davis Drive
Jackson, MS 39272
Telephone 601 372-3903
Fax 601 373-9587
www.groen.com

OM/SM-DH-CE

Part Number 128417 Rev. C